CSE. Chiang Sung Enterprise Co.

CONNECTING AND REGULATING FITTINGS

HEATED PIPING SYSTEMS

http://WWW.csee.com.tw

HEATED PIPING SYSTEMS

Heated fittings in the food processing industry must be used in the operations, where the transported food material contains substances (fats), which set solid at common room temperatures, or which feature high viscosity, which prevents their transport through piping at temperatures approximately 20 ° C.

The heated fittings are classified to two groups:

- Heated sections of piping (pipes, bends, T-parts)
- Heated control fittings (flaps, ball valves) and special sections of piping, such as filters.

All fittings with heating feature double housing, through which the hot water passes. The water goes to the heated space through the connecting fittings, usually sleeves (G 3/8 “Ş 1/2 “or G 3 /4 “

The outer housing features always two connecting fittings (usually sleeves), one for inlet and one for outlet of the hot water, to enable flow of the hot water along the heated section of the piping.

For connection of the hot water, the heated fittings of sizes DN 25 - DN 65 use the connection fittings of clearance G 3/8 “Ş 1/2 “ and the fittings of the nominal size DN 80 - DN 100 use the connection fittings of clearance G 3 /4 “ .

HEATED STRAIGHT TUBING

DN (mm)	A Lenghts (mm)	B Connection to heating Muff - Muff Nipple - Nipple	Terminations Connection
25	200 - 6000	3/8“	S-S G-G KM-KM KM-G PN-PN Clamp-Clamp
32			
40		1/2“	
50			
65			
80		3/4“	
100			

Tube W-W

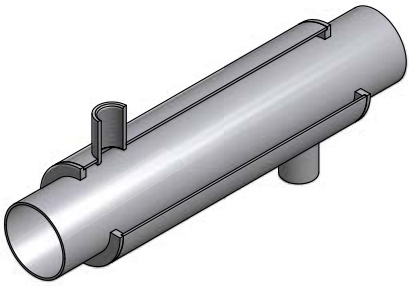

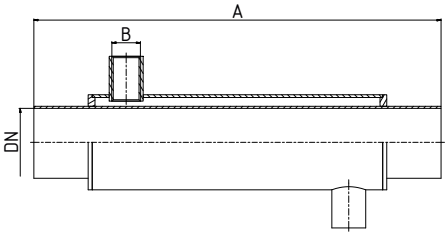

Tube M-NL

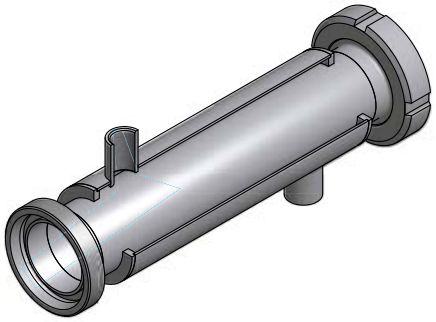

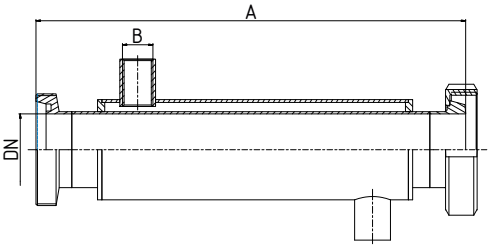

Tube F-F

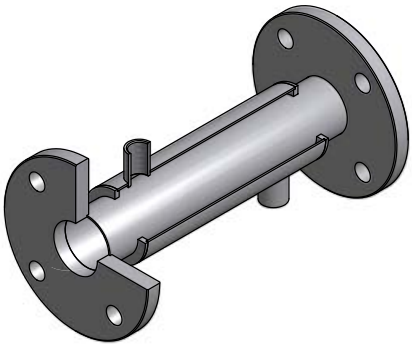

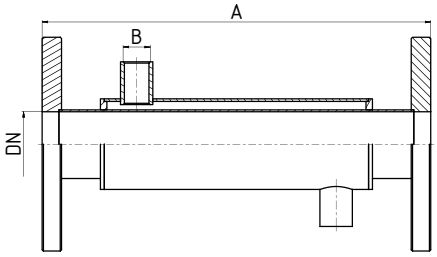

Tube C-C

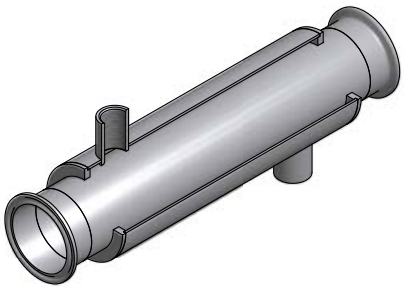

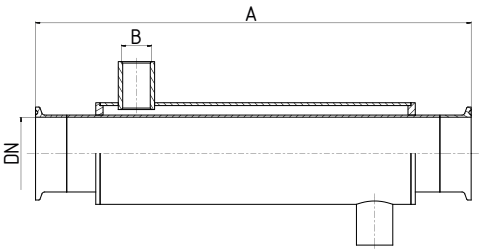

HEATED ELBOW

DN (mm)	B Connection to heating Muff - Muff Nipple - Nipple	Terminations Connection
25	3/8“	S-S G-G KM-KM KM-G PN-PN Clamp-Clamp
32		
40	1/2“	
50		
65		
80	3/4“	
100		

Elbow W-W

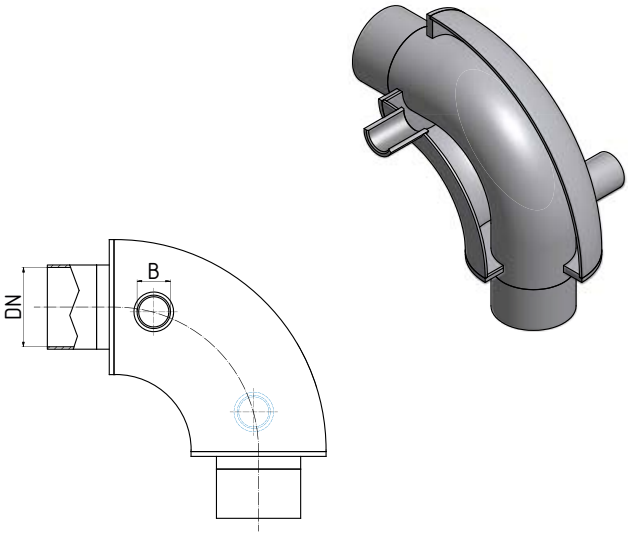

Elbow M-NL

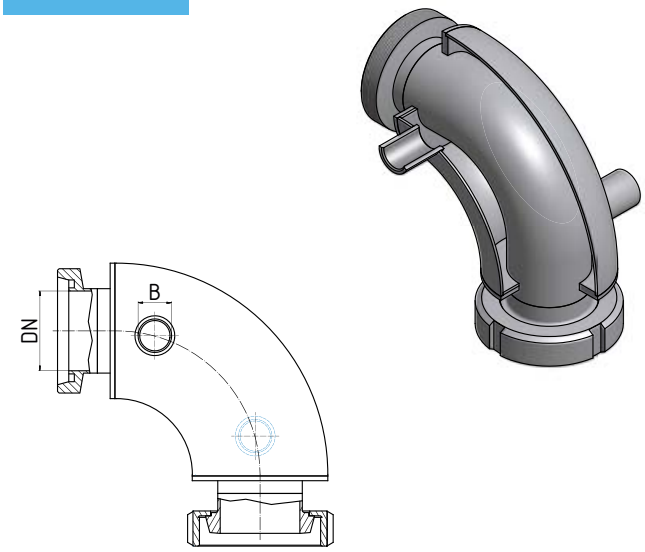

Elbow F-F

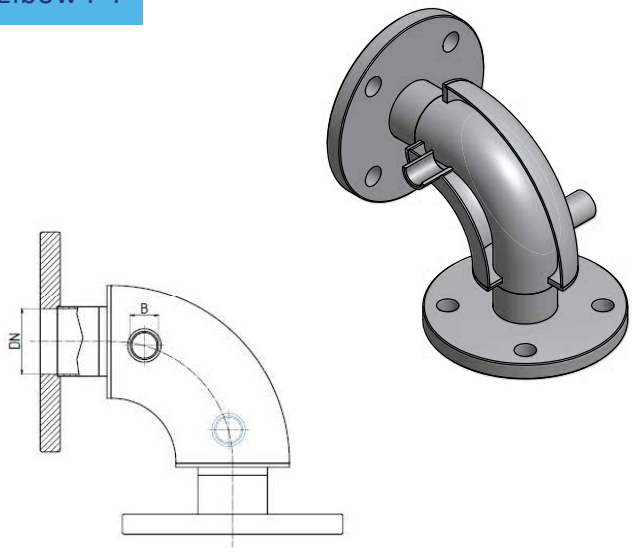

Elbow C-C

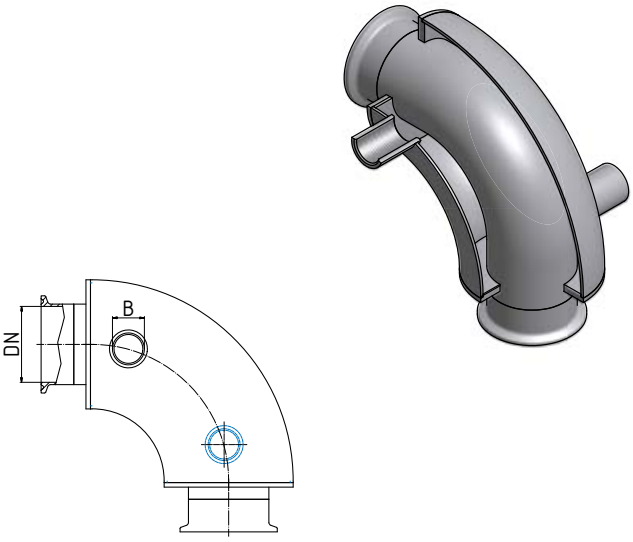

HEATED TEE

DN (mm)	B Connection to heating Muff - Muff Nipple - Nipple	Terminations Connection
25	3/8“	S-S-S G-G-G KM-KM-KM KM-G-KM PN-PN-PN Clamp-Clamp-Clamp
32		
40	1/2“	
50		
65		
80	3/4“	
100		

Tee W-W-W

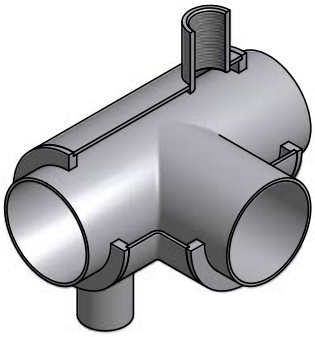

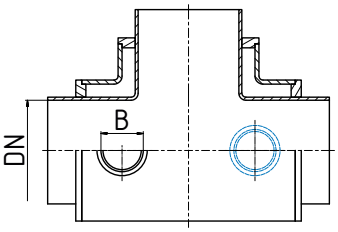

Tee M-NL-M

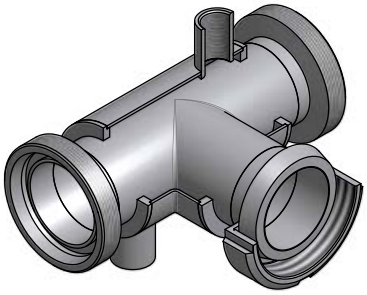

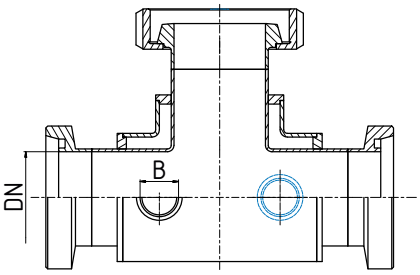

Tee F-F-F

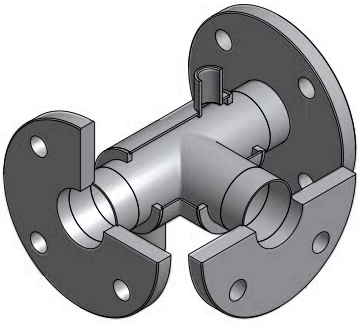

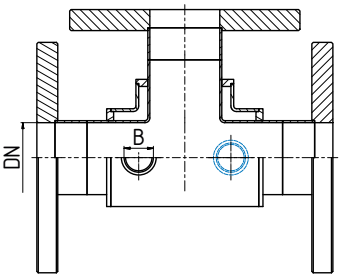

Tee C-C-C

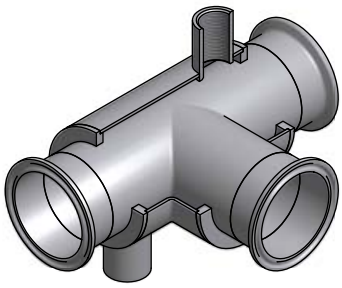

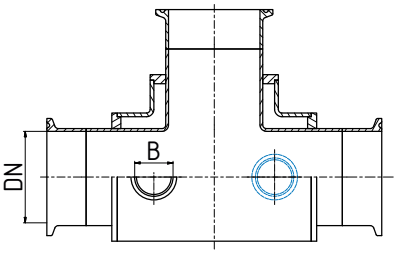

HEATED BALL VALVE

DN (mm)	B Connection to heating Muff - Muff Nipple - Nipple	Завершение Присоединение Terminations Connection
25	3/8“	S-S G-G KM-KM KM-G PN-PN Clamp-Clamp
32		
40	1/2“	
50		
65		
80	3/4“	
100		

HBAV W-W

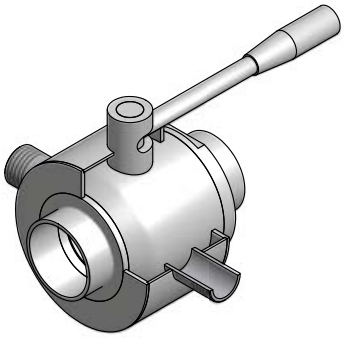

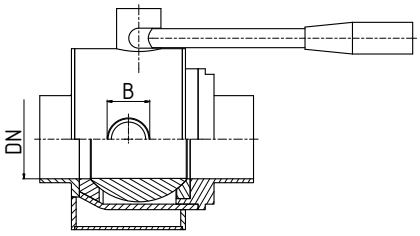

HBAV M-M

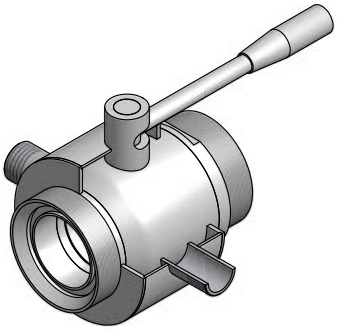

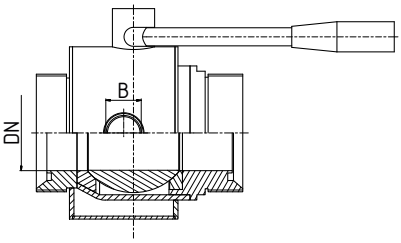

HBAV M-NL

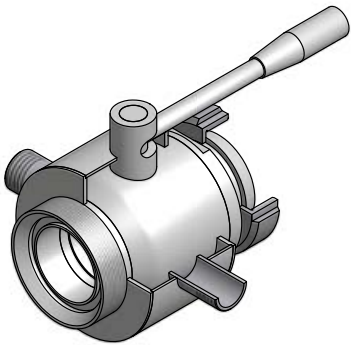

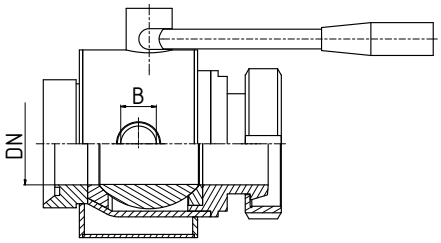

Ball valve with pneumatic actuator

HEATED BUTTERFLY VALVE

DN (mm)	B Connection to heating Muff - Muff Nipple - Nipple	Terminations Connection
25	3/8“	S-S G-G KM-KM KM-G PN-PN Clamp-Clamp
32		
40	1/2“	
50		
65		
80	3/4“	
100		

HBV+P4 W-W

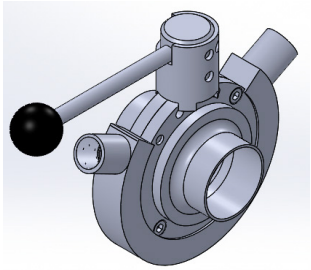

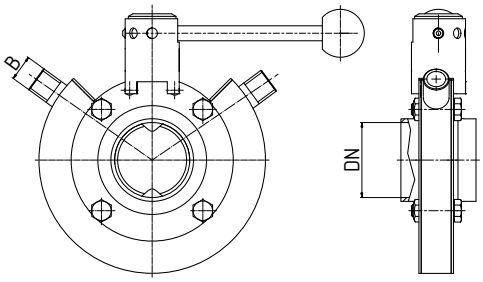

HBV+P4 M-M

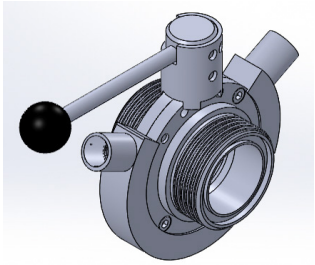

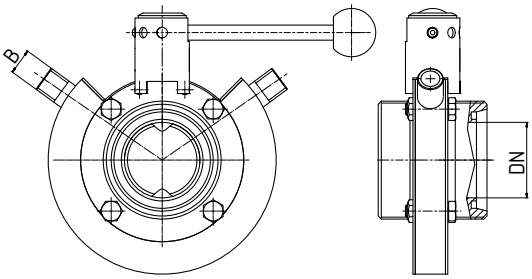

HBV+P4 C-C

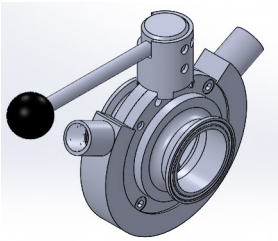

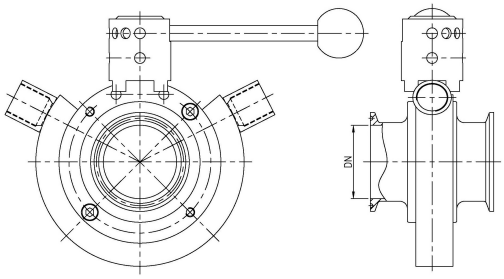

HEATED BUTTERFLY VALVE WITH PNEUMATIC ACTUATOR

DN (mm)	B Connection to heating Muff - Muff Nipple - Nipple	Terminations Connection	Pneumatic actuator
25	3/8“	S-S G-G KM-KM KM-G PN-PN Clamp-Clamp	4405 (P05) 4410 (P10)
32			
40	1/2“		
50			
65			
80	3/4“		
100			

HBV+LAC W-W

Heated butterfly valve weld-weld with pneumatic actuator

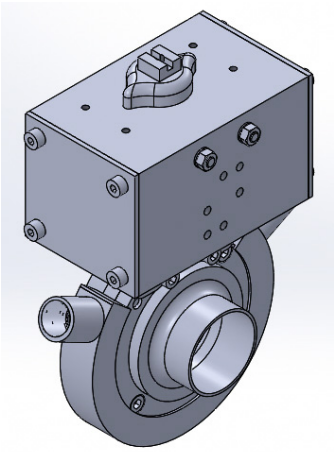

HBV+LAC M-M

Heated butterfly valve male-male with pneumatic actuator

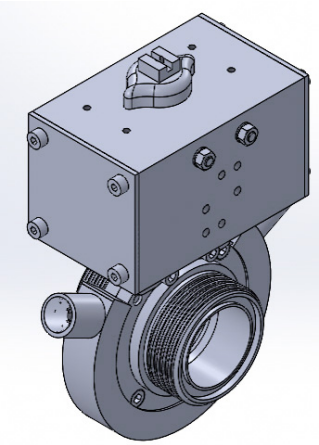

HBV+LAC C-C

Heated butterfly valve clamp-clamp with pneumatic actuator

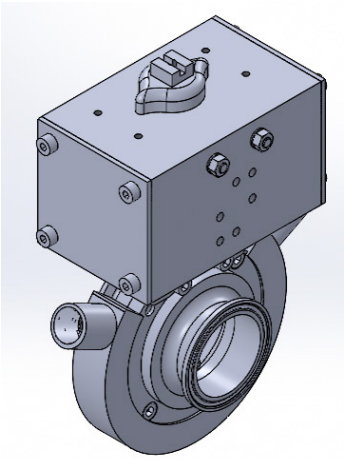

HEATED BUTTERFLY VALVE WITH PNEUMATIC ACTUATOR

DN (mm)	B Connection to heating Muff - Muff Nipple - Nipple	Terminations Connection	Pneumatic actuator
25	3/8“	S-S G-G KM-KM KM-G PN-PN Clamp-Clamp	4415 (P15) 4420 (P20)
32			
40	1/2“		
50			
65			
80	3/4“		
100			

HBV+AC W-W

Heated butterfly valve weld-weld with pneumatic actuator

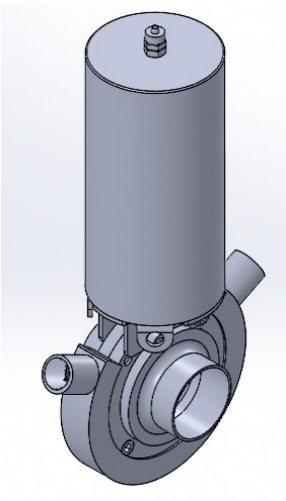

HBV+AC M-M

Heated butterfly valve male-male with pneumatic actuator

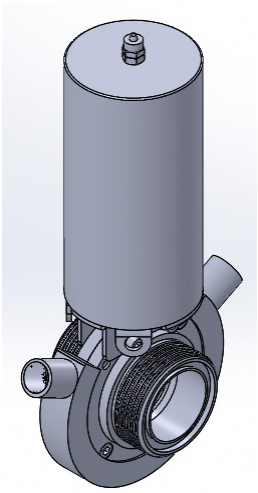

HBV+AC C-C

Heated butterfly valve clamp-clamp with pneumatic actuator

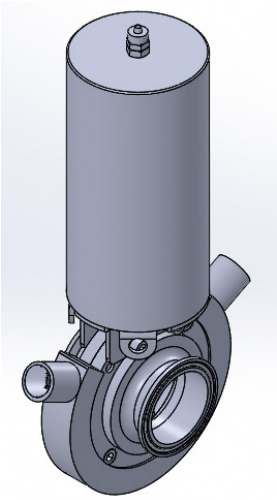

HEATED STRAINER

DN (mm)	B Connection to heating Muff - Muff Nipple - Nipple	Terminations Connection
25	3/8“	S-S G-G KM-KM KM-G PN-PN Clamp-Clamp
32		
40	1/2“	
50		
65		
80	3/4“	
100		

ST L/L-W

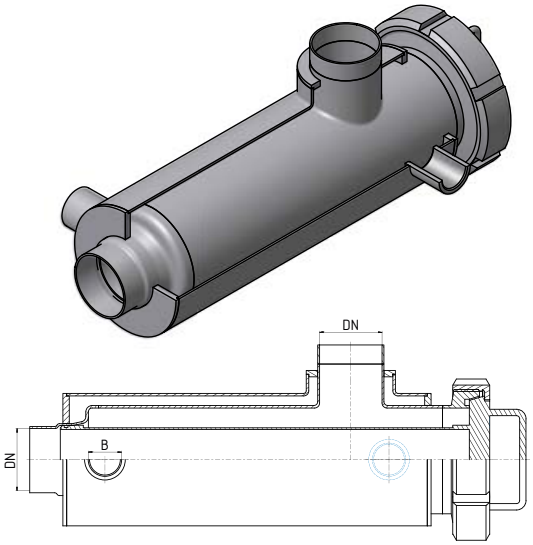

ST L/L-C

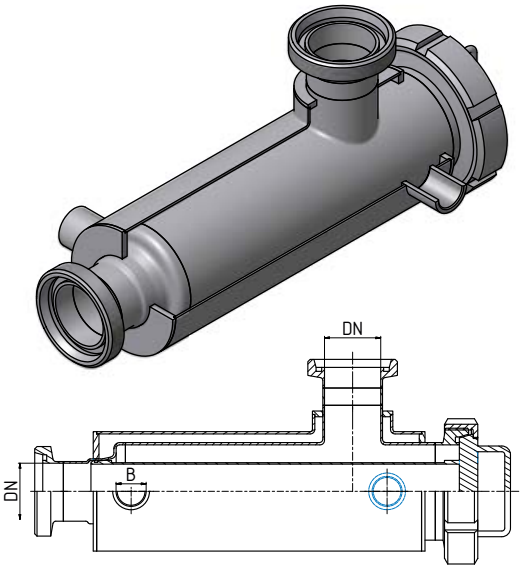

ST L/L-NL

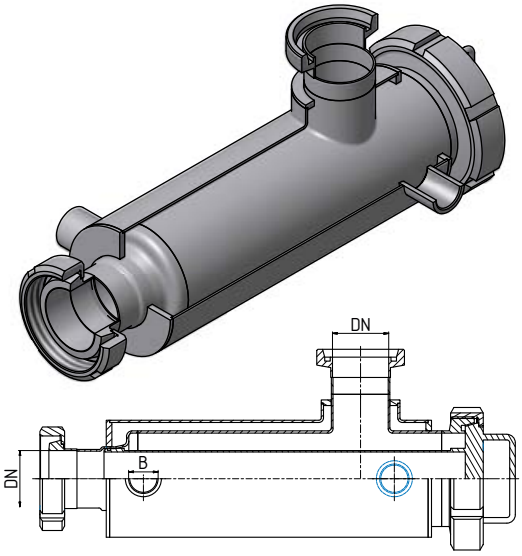

Head office

TAIWAN

強 淞 企 業 股 份 有 限 公 司

CSE. CHIANG SUNG ENTERPRISE CO., LTD.

台灣彰化縣北斗鎮新工一路65號 (北斗科學工業園區)

No.65, Sheng Kung 1 St. Rd. Pei Tou, Industrial Park, Changhua, Taiwan
TEL：+886-4-8876919 (Rep)　FAX：+886-4-8876918
E-mail：csee@ms57.hinet.net

THAILAND

CSE TECHNOLOGIES CO., LTD.

Factory：
39,39/1 moo 7 Petkaseam Rd, Nongchumpon, Khaoyoy,
Petchaburi, Thailand 76140
Tel：+66-327-96234, +66-327-96225~6　FAX：+66-327-96247

Office：
Tel：+66-24158051-3　FAX：+66-24158059
E-mail：sales@csetechnologies.co.th

CHINA

福建強新五金機械有限公司
FUJIAN CHIANG SHIN HARDWARE MACHINERY CO., LTD.
福建省漳州市長泰縣興泰工業區
Xing Tai Industrial Zone RC Chang Tai Zhang Zhou Fujian
TEL：+86-596-8310856　FAX：+86-596-8310866

上海辦：
CSE上海事業部 / 廣州辦公室
Tel：+86-21-67691138, +86-21-67691190　FAX：+86-21-67691007
E-mail：stevencse@126.com

CSE. Chiang Sung Enterprise Co.

Worldwide service:
New York / India / Thailand / China / Xiamen / Guangzhou